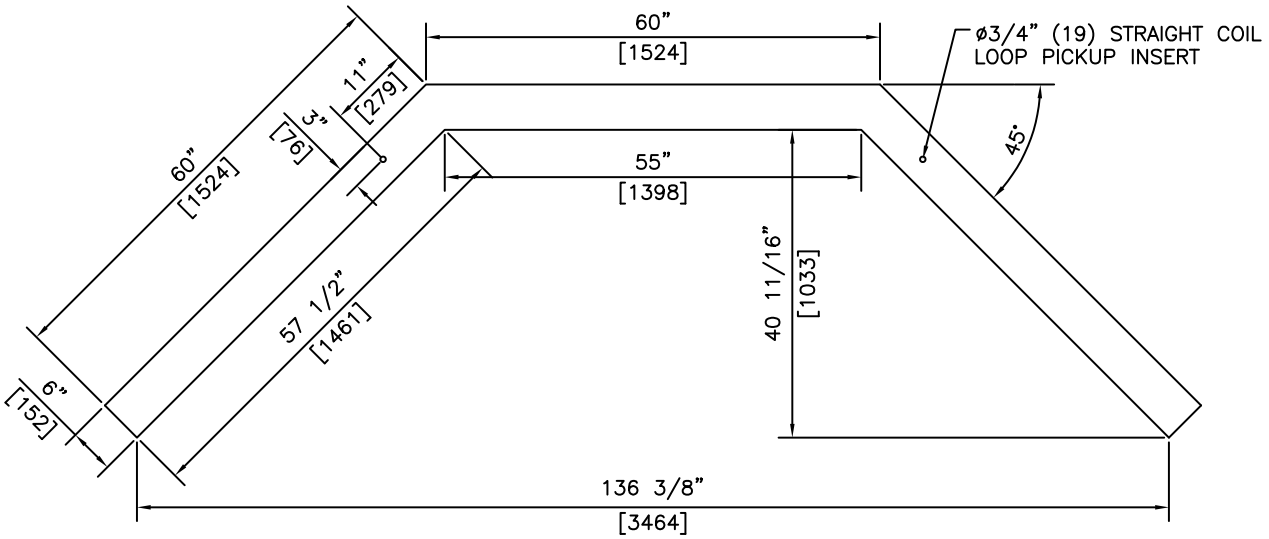

PLAN

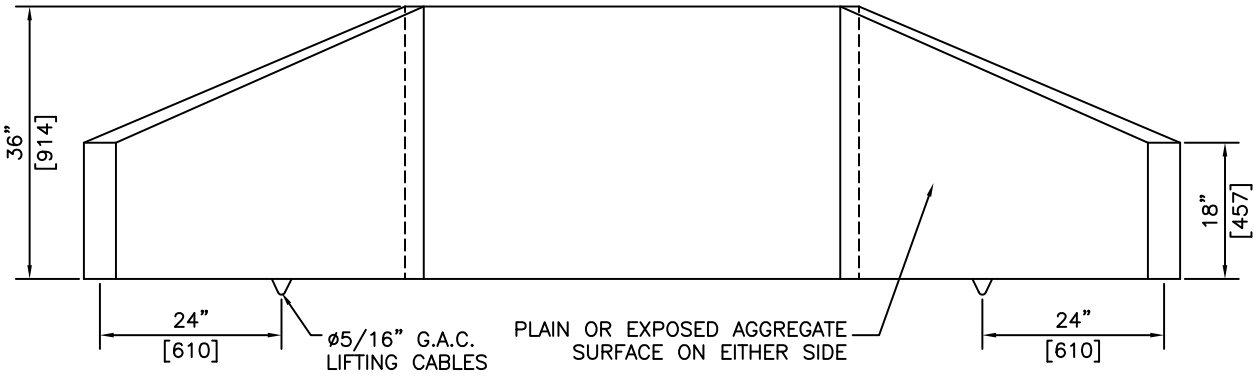

ELEVATION

NOTES:
1) 27.6 MPa @ 28 DAYS

REVISED: FEB 23 2005

KON KAST products (2005) ltd. "Committed To Quality And Service"	3440 UNIVERSITY WAY KELOWNA B.C. V1V 1V9 PH: (250)765-1423 FX: (250)765-0820	BY: PKR DATE: FEB 23 05 SCALE: NTS	**TRANSFORMER & FIRE HYDRANT RETAINING WALL**	ITEM NO. **1056**